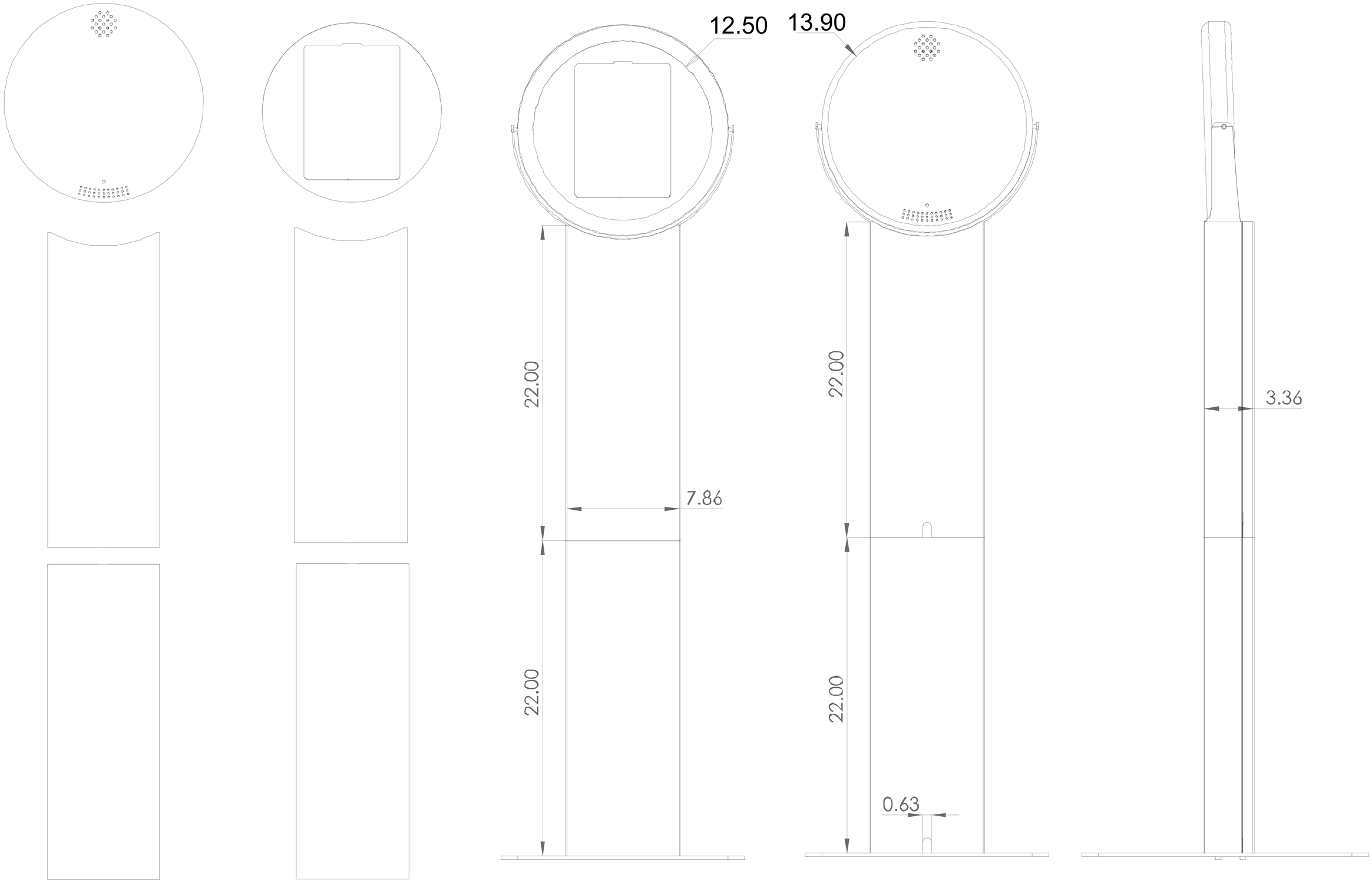

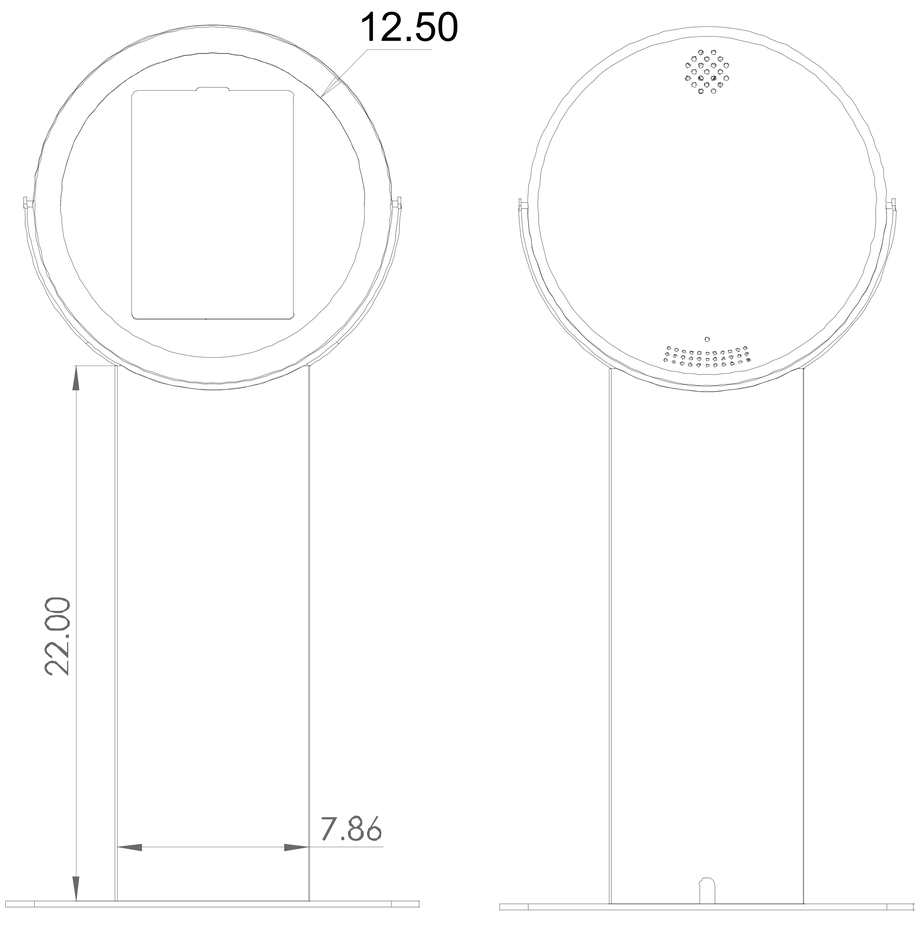

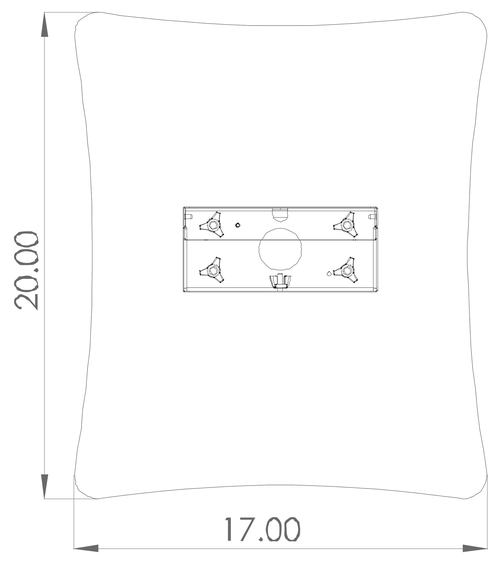

ATA Photobooths
Helio 2nd Gen
Scale 1:1